PUBLIC ADDRESS / SPEAKERS / CEILING

SKY-5T

100 V LINE TRANSFORMER 5" CEILING LOUDSPEAKER

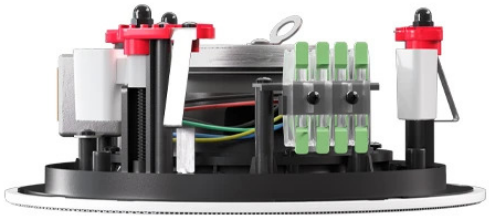

IP44 | SALT MIST RESISTANCE | 3-POINT ANCHORAGE | ANTI-DROP SYSTEM | TAP-LOCK TERMINALS | TURN-LOCKABLE GRILLE

- 5" double cone speaker. 12/6/3 W RMS@100 V
- Low profile aluminium grille
- Highly conductive quick-connect terminals
- Anti-fall system for installation assistance

+ Info:
https://fonestar.com/SKY-5T

ESPECIALLY RECOMMENDED IN:

Hospitality | Retail | Hotels | All sectors

DESCRIPTION

Design by Fonestar products are the result of in-depth research and active listening to our customers, turning their needs into competitive solutions.

Stylish design and acoustic versatility in a 5'' ceiling speaker
The SKY-5T is a 100 V line transformer ceiling loudspeaker designed to combine aesthetics and functionality in professional sound system engineering and installation projects. Its frameless, low-profile grille in rust-resistant aluminium provides a discreet, modern finish. In addition, it is detachable, twist-lockable and customisable, allowing the logo to be removed and painted to suit the environment.

Key benefits of the SKY-5T
This loudspeaker is designed to meet the needs of demanding installers and technical projects thanks to advanced features:

Efficient installation: quick-connect terminals for 0.4 to 4 mm² cables, anti-fall system and safety hook for easy mounting in ceilings up to 30 mm thick.
Guaranteed durability: high-strength materials, such as UV-protected ABS and painted aluminium grille, meet dust, water and neutral salt spray resistance standards (IP-44).
Excellent acoustic performance: wide response range (55-20,000 Hz), optimised coverage angles and sound pressure of up to 98 dB, ideal for indoor and outdoor PA projects.

Why choose SKY-5T?
The SKY-5T stands out for its combination of performance, reliability and design:

High-quality sound thanks to its 5'' dual-cone polypropylene diaphragm and adjustable impedance settings (833 Ohm to 3.333 Ohm).
Application flexibility with support for challenging environments (-20 °C to 70 °C, 95 % max. humidity).
Easy maintenance and customisation, suitable for multiple environments, from offices to commercial spaces.

The SKY-5T is the perfect choice for those seeking quality, style, and functionality in in-ceiling loudspeaker solutions.

+ Info:
https://fonestar.com/SKY-5T

TECHNICAL CHARACTERISTICS

FEATURES	Ceiling loudspeaker with 100 V line transformer. Low profile frameless grille, constructed from rust resistant aluminium. Detachable, turn-lockable grille. The logo can be removed and painted. Fast connection terminals and high conductivity. Anti-fall system for installation assistance. Hook for safety cable. Stable, worm-gear ceiling brackets. Protection against dust and water.
POWER	12 W RMS 16 W MAX.
SPEAKER	5" polypropylene double cone diaphragm
RESPONSE	55-20,000 Hz @ -10 dB 70-20,000 Hz @ -3 dB
IMPEDANCE	12 W RMS@100 V (833 Ohm) 6 W RMS@100 V/70 V (1.666 Ohm/816 Ohm) 3 W RMS@100 V/70 V (3.333 Ohm/1,633 Ohm) 1'5 W RMS@70 V (3.266 Ohm)
SENSITIVITY	85 dB @ 1 W/1 m
SOUND PRESSURE	97 dB @ max. W/1m Continuous 98 dB @ max. W/1m Peak
COVERAGE ANGLE	90º@1kHz (-6 dB)
PROTECTIONS	IP-44 in compliance with IEC 60529 EN ISO 9227:2006 Neutral Salt Spray Test
MATERIAL	ABS (UV resistant) Liquid paint aluminium grille
CONNECTORS	Highly conductive quick-connect terminals For 0.4 ~ 4 mm² cross section cable
OPERATION TEMPERATURE	-20ºC ~ 70ºC (48 h)
STORAGE TEMPERATURE	10ºC ~ 40ºC
MAXIMUM HUMIDITY	95%
COLOUR	White (RAL 9003)
DIMENSIONS	Total loudspeaker: 214 mm Ø x 85 mm height Grille section: 5 mm Recessed height: 80 mm Installation hole: 180 mm Ø Maximum ceiling thickness: 30 mm
WEIGHT	0.8 kg
ACCESSORIES	Installation template

+ Info:
https://fonestar.com/SKY-5T

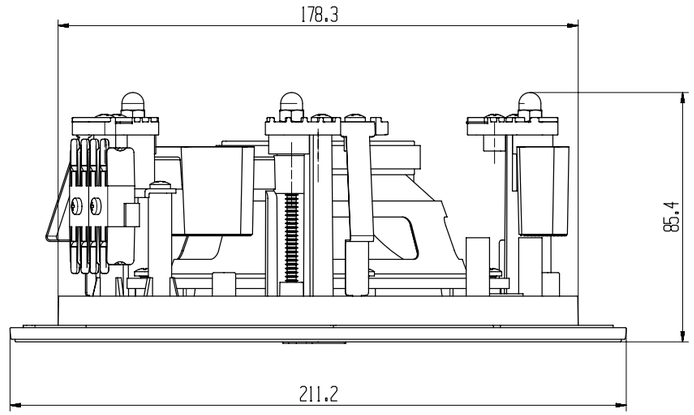

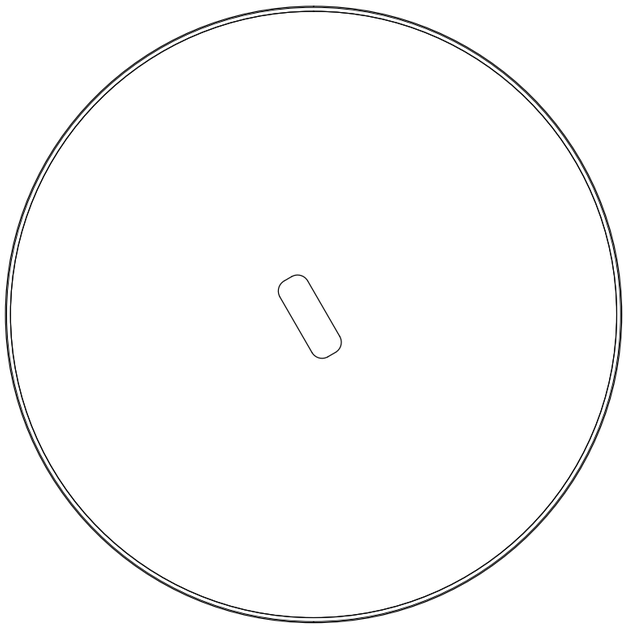

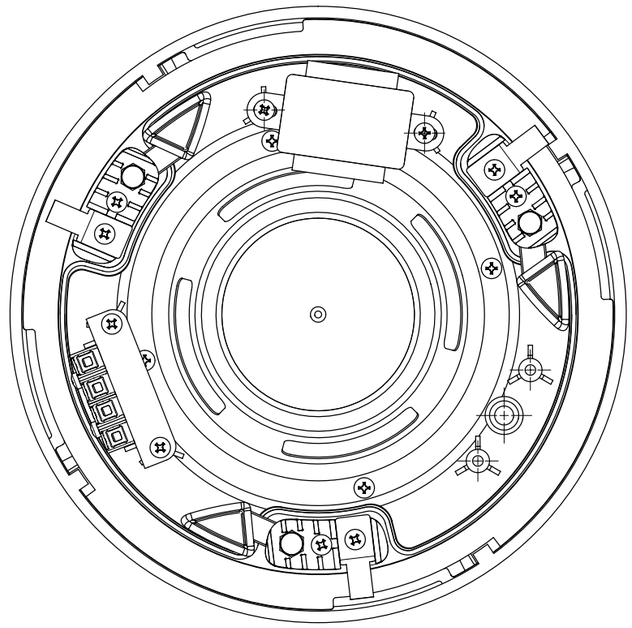

Product: SKY-5T Line Drawings	FONESTAR www.fonestar.es
Date: 2025-06-12	