START Panel UGR19 600x600 DALI 4000lm 840

Item No: 0044639

SYLVANIA

START™

LED Panel with backlit technology, ideal for general indoor lighting applications such as breakout areas, offices and meeting rooms. Extruded aluminium frame, passive cooling. Low glaring UGR<19. RG0, 90 degree beam angle , optical system: PS diffuser with Prismatic finish. Light color temperature: 4000K Neutral White, total system power: 30W , total fixture output: 4000lm, efficacy: 133 lm/W, Ra80 typical, LED chromacity: 3 step MacAdam ellipse (SDCM3), lifespan: 100,000 hours at 70% of the original output (L70B50), IR/UV free light source without heat radiation, operating voltage: 220-240V / 50-60Hz, low flicker, DALI dimmable driver, electrical protection: Class II. Degree of Protection: IP40/IP20, suitable for indoor environment only. Nominal size: 595x595mm, Loop in / loop out wiring, saftey cables & quick connector included, 26mm nominal height, White color frame, weight: 2,07Kg.

Technical Assets

Dimensions (mm)

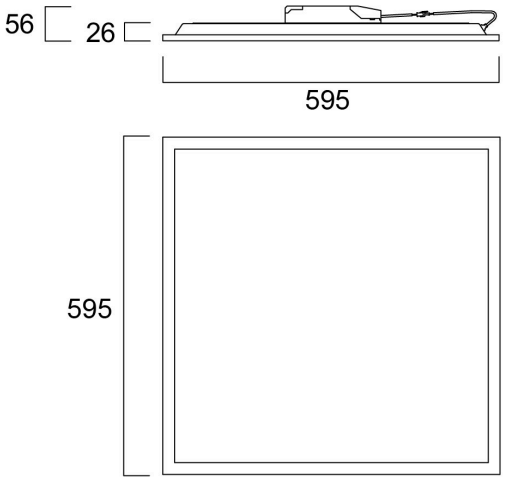

Photometrics

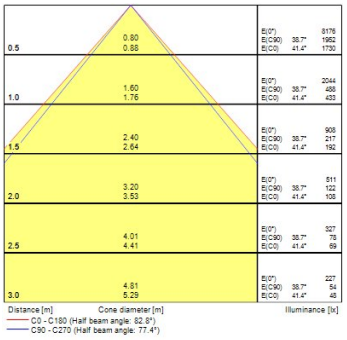

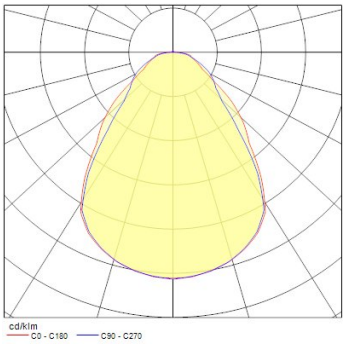

START Panel UGR19 600x600 DALI 4000lm 840

Item No: 0044639

SYLVANIA

General data

Product name	START Panel UGR19 600x600 DALI 4000lm 840
Technology	LED (3 SDCM)
Cap/Base	N/A
Housing	Steel
Mount	Ceiling recessed mounting, Suspended
General application	Education, Office
Operating temperature range (°C)	-10°C...+45°C
ETIM Class	EC002892
E-number FI	4279390
Warranty	5 years

Optical data

Fixture luminous flux (lm)	4000
Luminaire efficacy (lm/W)	133
Correlated colour temperature (k)	4000
Light colour	Neutral White
CRI (Ra)	80
Colour Variation Initial (SDCM)	SDCM3
Beam Angle (°)	90
Distribution type	Symmetric
Glare control	< 19
Photobiological Risk Group	RG0

Electrical data

Total power consumption (W)	30
Primary Supply/Product voltage - min (V)	220.0
Primary Supply/Product voltage - max (V)	240.0
Lamp power factor	0.9
THD (at 230 V, 50 Hz, full load, at 100% dimming level) ≤ xx.x %	15.0
Electrical protection	Class II
Control gear type	LED driver constant current
Dimmable	Yes
Dimming method	DALI-2
Drive current (mA)	700
Inrush Current (A)	5.6
Inrush Duration (µs)	50
Energy Efficiency Class (A->G) of contained light source	D
Nominal Frequency (Hz)	50/60Hz
LED Flickering Rate	Ultra low (5% or less)
Max. products per 10A C Breaker	37
Max. products per 16A C Breaker	59
Max. products per 10A B Breaker	37
Max. products per 16A B Breaker	59
Connectable conductor cross section - Max (mm^2)	1.5

Lifetime data

Lifespan L70 B50	100000
Lifespan L70 B20	100000
Lifespan L70 B10	100000
Lifespan L80 B50	94000
Lifespan L80 B20	76000
Lifespan L80 B10	67000
Lifespan L90 B50	45000
Lifespan L90 B20	37000
Lifespan L90 B10	33000

START Panel UGR19 600x600 DALI 4000lm 840

Item No: 0044639

SYLVANIA

Physical data

Housing colour	RAL 9003 - Signal white
IP rating	IP40/20
IK rating	IK03
Diffuser finish	Diffuse
Diffuser material	PS Polystyrene
Nominal Product Length (mm)	595
Nominal Product Width (mm)	595
Nominal Product Height (mm)	26
Weight (kg)	1.958

Packaging

Product EAN number	5410288446394
Packaging single length / height (cm)	60.3
Packaging single width (cm)	3.8
Packaging single depth (cm)	69.0
DUN14 (inner)	15410288446391
Units per outer package	4
Packaging outer length / height (cm)	71.4
Packaging outer width (cm)	17.6
Packaging outer depth (cm)	64.2

Safety data

Glow Wire Test (°C)	650
Optimal operating condition (°C)	-10-45