rabalux®

76000
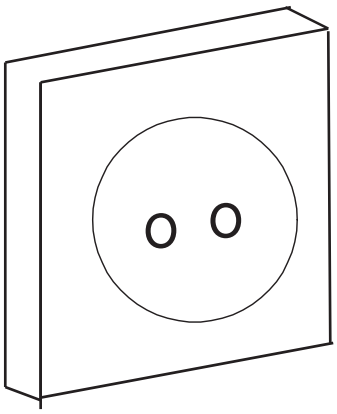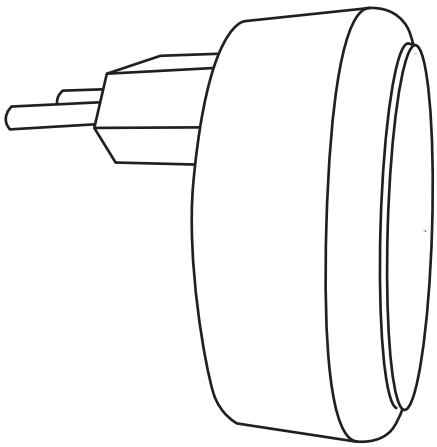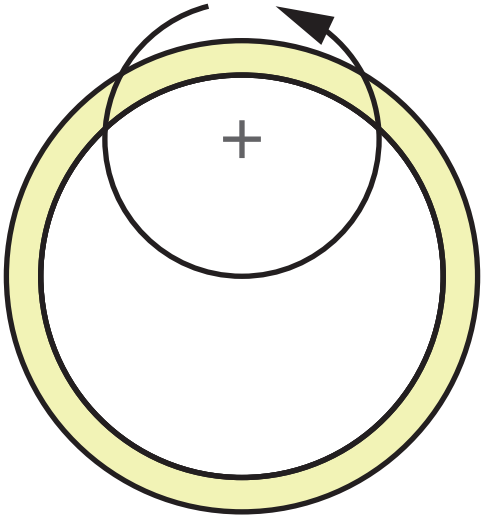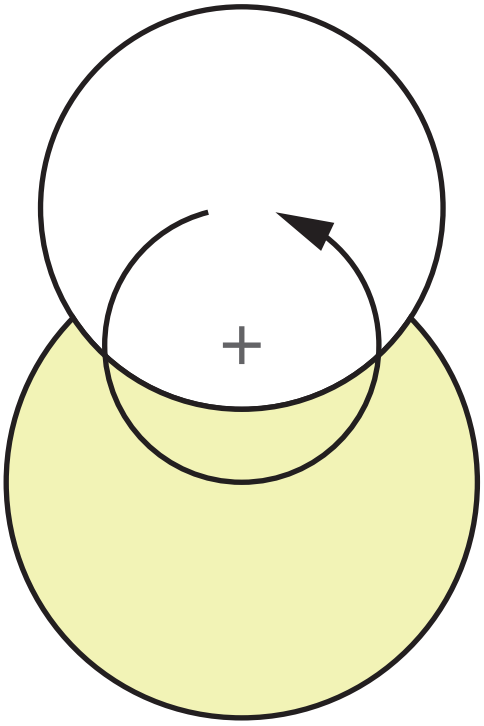
A