PUBLIC ADDRESS / SOUND KITS / WALL

KS-WALL

2 SPEAKERS SOUND KIT

RADIO BLUETOOTH 2 AUX LINES USB MONO/STEREO

- Sound kit (all-in-one)
- With multiple playback options
- Excellent finish and elegant design
- High-quality, powerful stereo sound

ESPECIALLY RECOMMENDED IN:

Hospitality Retail Hotels All sectors

+ Info:
https://fonestar.com/KS-WALL

DESCRIPTION

All-in-one sound kit that includes a pair of ceiling speakers and a wall amplifier.With multiple playback options: Bluetooth®/USB, FM tuner with 50 preset stations, and two auxiliary inputs, expanding its possibilities and allowing you to enjoy music from any device with a line-level output.Additionally, with its 2 x 6" ceiling speakers, you can enjoy high-quality, powerful sound without distortion.2.15" LCD screen displaying mode and playback information.Allows setting a maximum volume limit to ensure the desired volume is not exceeded, along with a sleep timer and bass and treble equalization.This kit is designed for installation in universal square and round standard boxes, making it easy to integrate into any space.Control via touch buttons or the included remote control.Ideal for small sound systems in waiting rooms, small shops, homes, etc.

TECHNICAL CHARACTERISTICS

FEATURES	Sound kit: compact stereo amplifier with 2 x 6" ceiling speakers. Stereo player with Bluetooth receiver, USB player and FM tuner with 50 presets and auto search. Autoplay, starts playback automatically when switched on. Memory of the last selected mode. Playback mode memory (random, repeat). 2.15" LCD display of mode and playback information. Configurable maximum volume. Shut-off timer. Bass and treble equalization. Mono/stereo output selector of the player. Control via touch buttons or via included remote control. 2 x line level auxiliary inputs (mono). For square and round universal standard case.
BLUETOOTH	5.0 Bluetooth. 10 m transmission distance
POWER	15 + 15 W RMS@8 Ohm
SPEAKERS	2 x 6" speakers @8 Ohm ABS case Round aluminium grille without frame
INPUTS	1 x aux line, 3.5 mm jack, 200 mV RMS 1 x aux line, euroblock 1 x FM antenna
OUTPUTS	Loudspeakers: 4-8 Ohm, euroblock
COLOUR	White (RAL 9003)
POWER SUPPLY	100-240 V AC

+ Info:
https://fonestar.com/KS-WALL

DIMENSIONS	Amplifier: Exterior: 83 x 83 x 39 mm depth Assembly: 47 x 47 x 27 mm depth Distance between screws: 60 mm Speakers: 186 mm Ø x 70 mm depth Cut-out hole: 170 mm
WEIGHT	1.2 kg
ACCESSORIES	Cableado de altavoz 2 x 5 m Cable de antena FM Mando a distancia Pilas incluidas
OPTIONAL	DOT-BOX-B: caja para montaje en superficie
NOTE	Bluetooth ID and password can be changed on request.

+ Info:
https://fonestar.com/KS-WALL

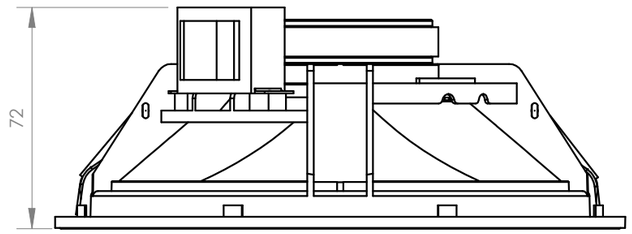

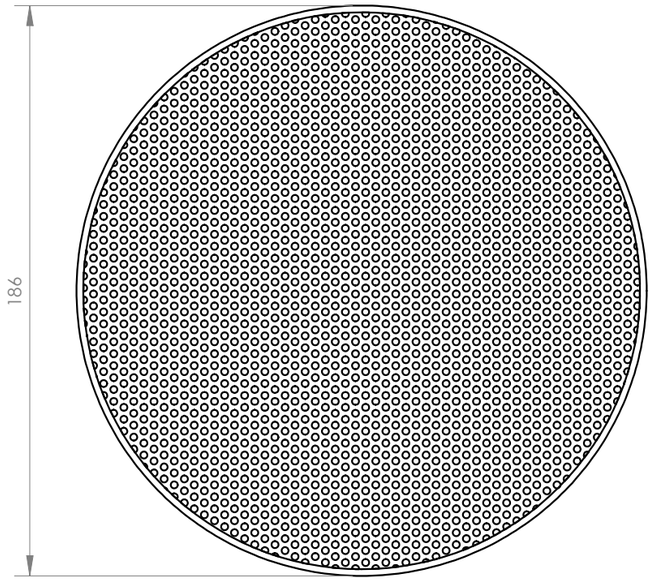

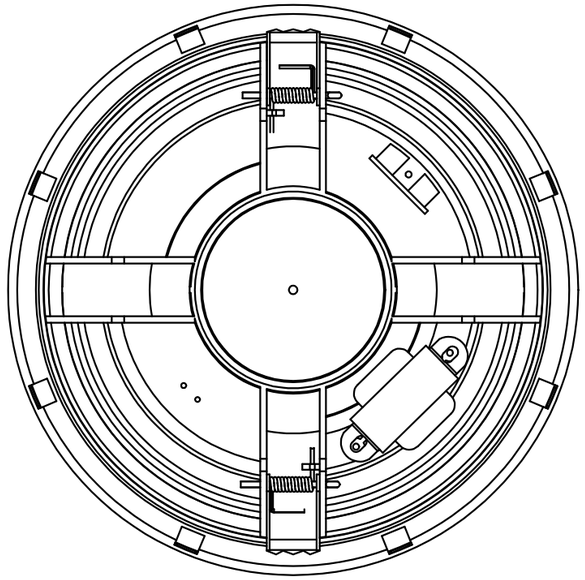

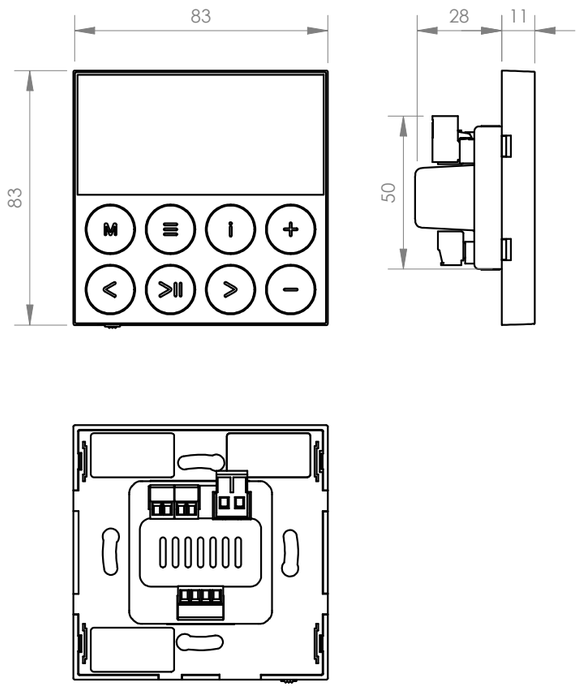

FONESTAR	Model	Description	Units	Scale
	KS-WALL	2 SPEAKERS SOUND KIT	mm	1:2