Presence detector - Professional Line

IR Quattro SLIM XS 4m

COM1 - square
EAN 4007841 032951
Article number 032951

infrared sensor	max. 4 x 4 m presence	IP20	1000 W	10 - 1000 lux with RC 8	1 min - 15 min with RC 8	ideal 2,5 - 4 m	Teach	iQ	5 years
			1000 W max.				Teach mode	IQ-mode	manufacturer's warranty steinel-professional.de/garantie

Function description

Noticeably Inconspicuous. IR Quattro SLIM XS, the extra-slim presence detector in concealed-box format. Fits into any standard concealed box. Overall height of just 6 mm. High-precision 360° infrared senor with globally unique retina lens and 16 sq.m square presence detection zone (4 x 4 m). Adjustment via remote control or Smart Remote. Round aperture is additionally enclosed.

Technical specifications

Dimensions (L x W x H)	55 x 80 x 80 mm
Manufacturer's Warranty	5 years
Settings via	Remote control, Smart Remote
With remote control	Yes
Version	COM1 - square
PU1, EAN	4007841032951
Type	Presence detector
Application, place	Indoors
Application, room	one-person office, hotel room, care room, function room / ancillary room, WC / washroom, Indoors
Colour	white
Colour, RAL	9010
Includes corner wall mount	No
Installation site	ceiling
Installation	In-ceiling installation, Ceiling
IP-rating	IP20
Ambient temperature	from 0 up to 40 °C

LED lamps > 8 W	64 W
Capacitive load in µF	176 µF
Technology, sensors	passive infrared, Light sensor
Mounting height	2,50 – 4,00 m
Mounting height max.	4,00 m
Optimum mounting height	2,8 m
Detection angle	360 °
Angle of aperture	71 °
Sneak-by guard	Yes
Capability of masking out individual segments	No
Electronic scalability	No
Mechanical scalability	No
Reach, radial	4 x 4 m (16 m^2)
Reach, tangential	4 x 4 m (16 m^2)
Reach, presence	4 x 4 m (16 m^2)
Switching zones	408 switching zones

IR Quattro SLIM XS 4m

COM1 - square
EAN 4007841 032951
Article number 032951

Technical specifications

Material	Plastic
Mains power supply	220 – 240 V / 50 – 60 Hz
Switching output 1, resistive	1000 W
Switching output 1, number of LEDs / fluorescent lamps	8 pcs.
Fluorescent lamps, electronic ballast	400 W
Fluorescent lamps, uncorrected	500 VA
Fluorescent lamps, series-corrected	500 VA
Fluorescent lamps, parallel-corrected	500 VA
Switching output 1, low-voltage halogen lamps	500 VA
LED lamps < 2 W	16 W
LED lamps > 2 W < 8 W	64 W

Functions	Normal / test mode, Semi-/fully automatic, Manual ON / ON-OFF
Twilight setting	10 – 1000 lx
Time setting	60 s – 30 Min.
Basic light level function	No
Main light adjustable	No
Twilight setting TEACH	Yes
Constant-lighting control	No
Interconnection	Yes
Type of interconnection	Master/master, Master/slave
Interconnection via	Cable
Product category	Presence detector

Accessories

EAN 4007841 009151	Remote control Smart Remote
EAN 4007841 559410	Service remote control RC8

IR Quattro SLIM XS 4m

COM1 - square
EAN 4007841 032951
Article number 032951

Detection Zone

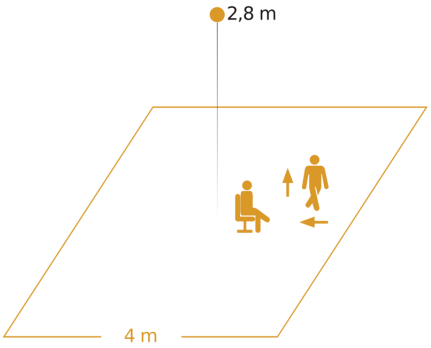

Possible mounting height: 2,50 m – 4,00 m
Orange: presence, tangential and radial

Dimension Drawing

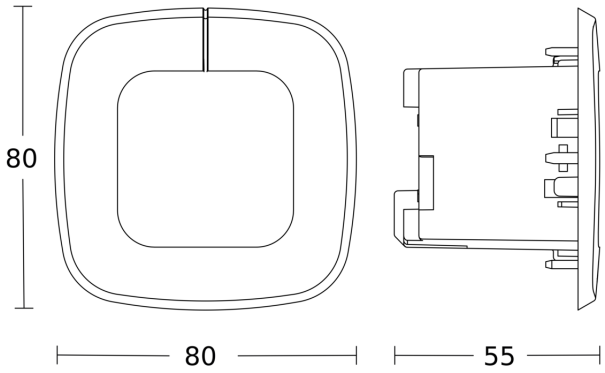

Master circuit diagram

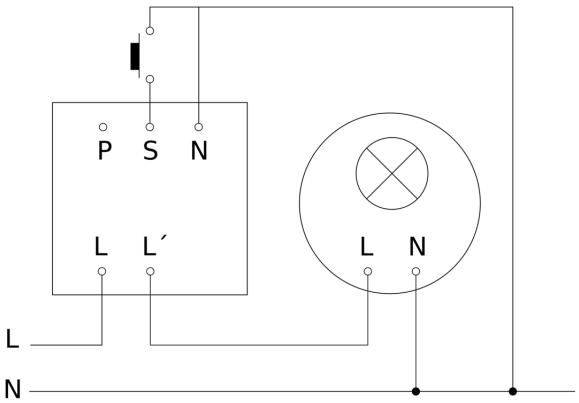

IR Quattro SLIM XS 4m

COM1 - square
EAN 4007841 032951
Article number 032951

Master/master interconnection circuit diagram

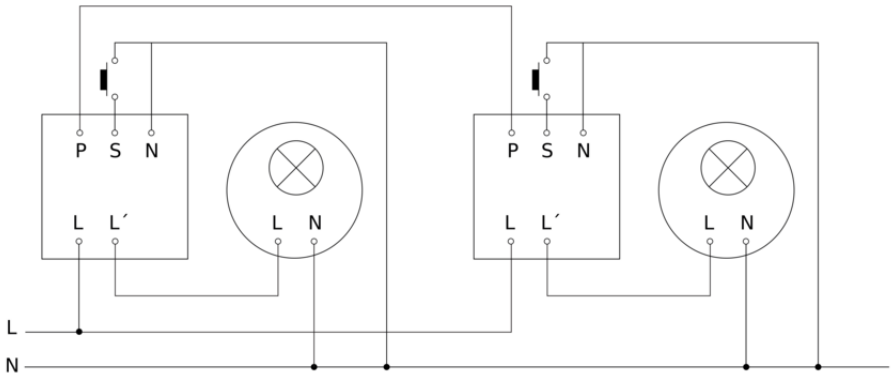
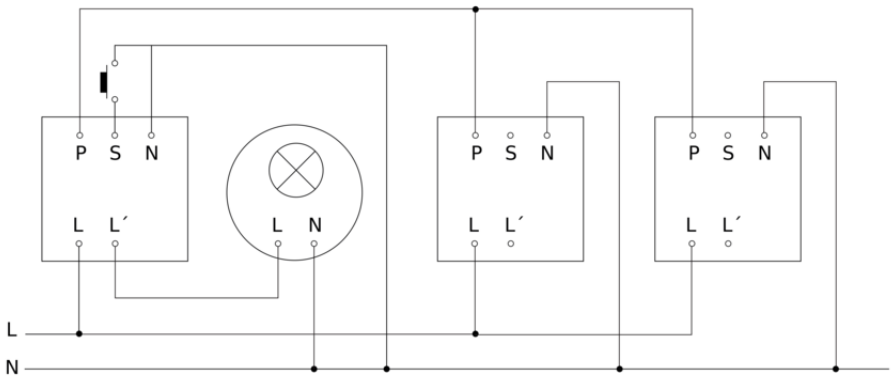
Master/slave interconnection circuit diagram