TRIDONIC

smartSWITCH G2 HF 5DP f

Automatic switching based on motion and light level

smartSWITCH G2 HF 5DP f

smartSWITCH G2 HF 5DP S f

Product description

- Motion detector for luminaire installation
- Motion detection through glass and thin materials (except metal)
- For automatic on/off switching of luminaires with electronic ballasts and LED drivers
- Bright-out function: luminaire is not switched on if there is adequate brightness
- Delay time, detection range and light value for the bright-out function can be set via 9 dip switches
- Max. installation height 5 m
- Two housing options allowing flexible installation
- Variable detection area (100 – 10 %)
- Zero cross switching supported
- Second neutral terminal for easy wiring
- Optimised for applications and environments with other wireless communication systems
- 5 years guarantee (conditions at https://www.tridonic.com/en/int/services/manufacturer-guarantee-conditions)

Website
http://www.tridonic.com/28004370

smartSWITCH G2 HF 5DP f

Automatic switching based on motion and light level

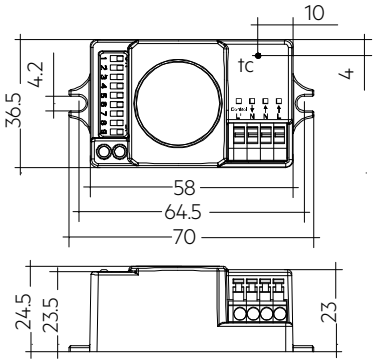

smartSWITCH G2 HF 5DP f

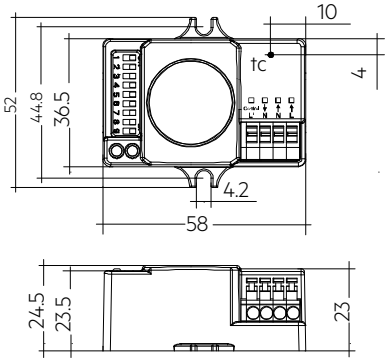

smartSWITCH G2 HF 5DP S f

Ordering data

Type	Article number	Dimensions L x W x H	Packaging, carton	Weight per pc.
smartSWITCH G2 HF 5DP f	**28004370**	70 x 36.5 x 24.5 mm	100 pc(s).	0.036 kg
smartSWITCH G2 HF 5DP S f	**28004371**	58 x 52.0 x 24.5 mm	100 pc(s).	0.036 kg

Technical data

Sensor type	HF-Sensor
Rated supply voltage	220 – 240 V
Mains frequency	50 / 60 Hz
Power	< 0.45 W
Frequency	5.8 GHz (± 75 MHz)
Transmission power	< 0.2 mW
Load resistive	800 W
Load capacitive	400 VA
Detection angle	30 – 150°
Max. detection area	ø 8 m
Max. mounting height	5 m
tc point	75 °C
Ambient temperature ta	-20 … +70 °C
Storage temperature ts	-20 … +70 °C
Humidity	min. 5 … max. 85 % at 30 °C
Type of protection	IP20
Protection class	Reinforced insulation
Housing material	PC, halogen-free
Housing colour	RAL 9016 (white)
Lifetime	50,000 h
Guarantee (conditions at www.tridonic.com)	5 Year(s)

Approval marks

RoHS

Standards

EN 61347-1, EN 61347-2-11, EN 300 440-2 V1.4.1, EN 301 489-3 V1.6.1, EN 62479, EN 55015, EN 61000-3-2, EN 61000-3-3, EN 61547

1. Standards

EN 61347-1
EN 61347-2-11
EN 300 440-2 V1.4.1 (2010-08)
EN 301 489-3 V1.6.1 (2013-08)
EN 62479:2010
EN 55015:2013 + A1:2015
EN 61000-3-2:2014
EN 61000-3-3:2013
EN 61547:2009

1.1 Glow-wire test according to EN 60598-1

850 °C passed

2. Common

smartSWITCH G2 HF 5DP f and S f provides simple cost-effective motion detection in combination with the corridorFUNCTION offered by Tridonic LED driver.
When the sensor detects movement it triggers a predefined motion detection profile in the LED driver.
When exceeded the user-definable light value at the integrated light sensor the LED driver remains switched off.
High-frequency technology enables the sensor to be installed in completely enclosed luminaires.

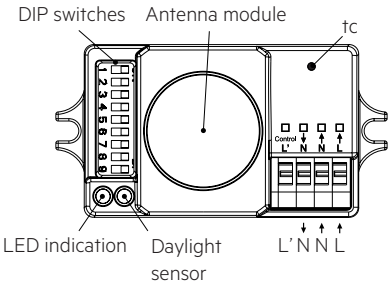

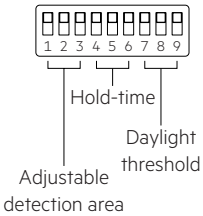

3. Installation

- Not for use with phase cut dimmers.
- The sensor must protrude over the light sources.
- The power supply must be disconnected before installation.
- Suitable for installation only in indoor luminaires without vibration.
- Opening angle of the sensor: must be at least 45 %.
- Motion detection: only possible through thin housing material (e.g. plastic or glass), do not use metal housing.
- Light sensor: must be able to detect reflected artificial light and reflected daylight.
- Reflected HF waves (e.g. of walls, floors, ceilings or furniture) and other HF transmitters can influence the motion detection.
- Avoid direct illumination of the light source on the sensor including housing.

3. Thermal details and lifetime

3.1 Expected lifetime

Expected lifetime		
smartSWITCH G2 HF 5DP (S) f	tc	75 °C
	Lifetime	50,000 h

The device is designed for a lifetime stated above under reference conditions and with a failure probability of less than 10 %.

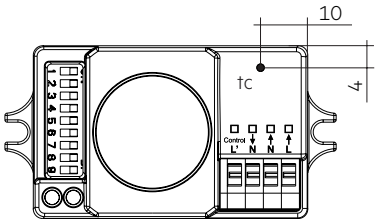

3.1 Wiring diagram

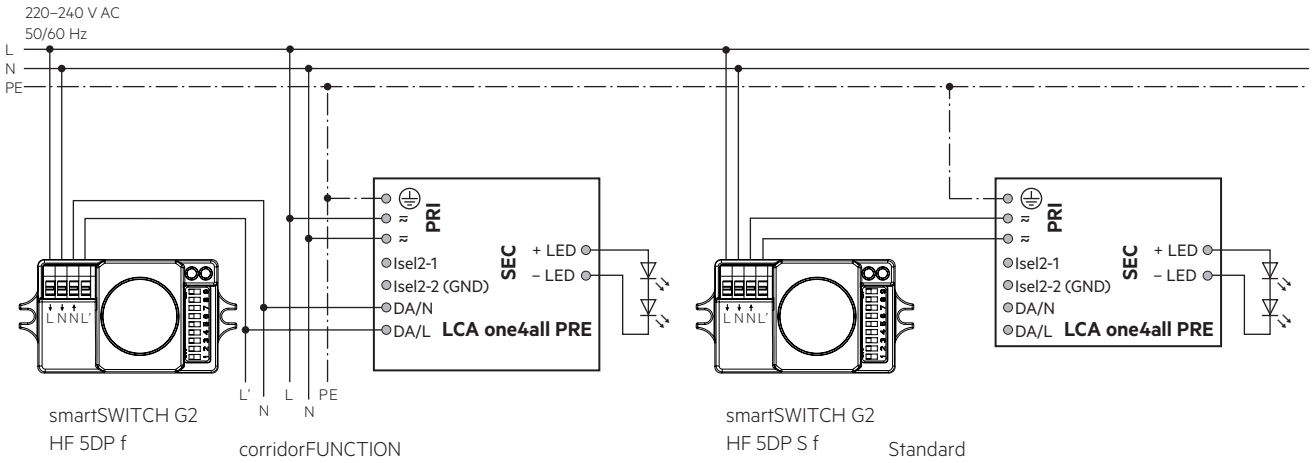

3.2 Combination multiple sensors and drivers

Maximum load (capacitive): 400 VA

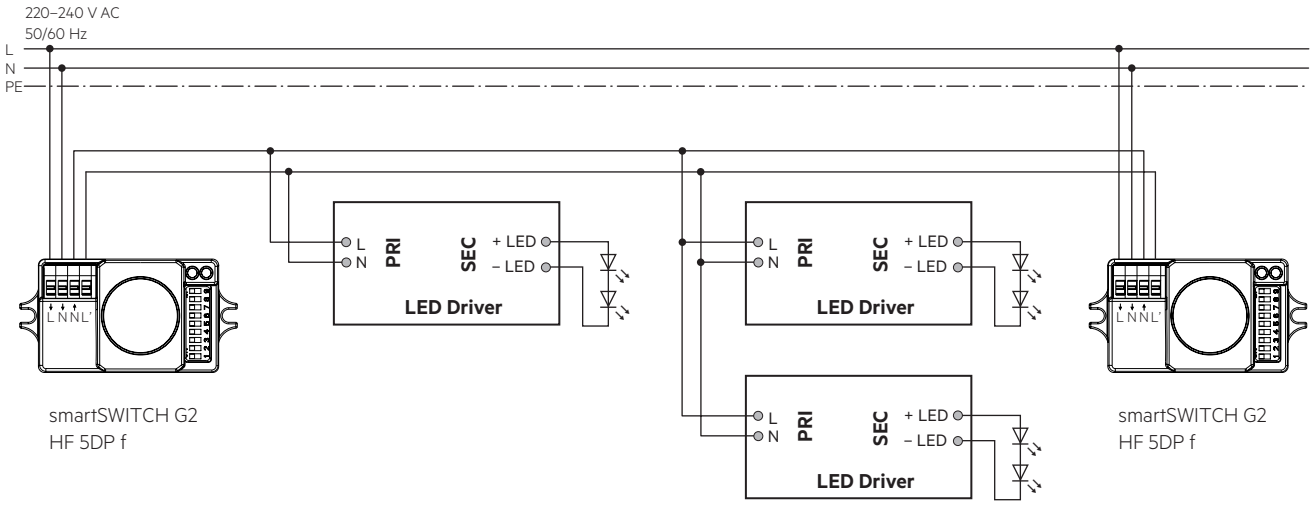

3.3 Wiring type and cross section

For wiring use stranded wire with ferrules or solid wire from 0.75 to 1.5 mm².
Strip 8 mm of insulation from the cables to ensure perfect operation of the push-in terminals.
Use one wire for each terminal connector only.

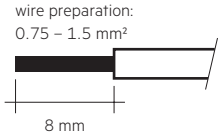

3.4 Minimum spacing for further sensors

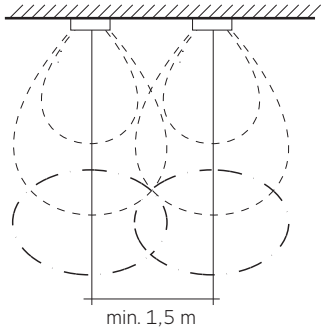

4. Functions

4.1 Setting up

Setting the detection area
To avoid unnecessary switching on of the lighting system due to an excessively large detection area, this can be limited.
The detection area indicates the diameter within motion is detected.

	1	2	3	Sensitivity
I	●	●	●	100 % (default)
II	○	●	●	75 %
III	○	●	○	50 %
IV	○	○	●	30 %
V	○	○	○	10 %

Setting the switch-off delay
To avoid unnecessary switching on and off of the lighting system it is possible to set a switch-off delay. The delay starts after the last motion in the detection area. With the detection of further motion during this delay it is retriggered. At the end of the delay the light will be switched off or the corridorFUNCTION is started.

	4	5	6	Hold time
I	●	●	●	5 s (default)
II	●	○	●	30 s
III	●	○	○	1 min
IV	○	●	●	5 min
V	○	●	○	10 min
VI	○	○	●	20 min
VII	○	○	○	30 min

Setting the daylight threshold value
To avoid unnecessary switching on of the lighting system when there is adequate illuminance, a threshold value can be set. The threshold value indicates up to which illuminance value detected movement cause the lighting system to switch on.

	7	8	9	Daylight sensor
I	●	●	●	Disable (default)
II	○	●	●	50 Lux
III	○	●	○	20 Lux
IV	○	○	●	5 Lux
V	○	○	○	2 Lux

Note:
Set the threshold value to I = Disable to ensure the sensor switches on in conjunction with the corridorFUNCTION.
In this setting the sensor will always switch on.

4.2 corridorFUNCTION

The corridorFUNCTION can be activated by applying a voltage of 230 V for 5 minutes at the switchDIM connection of the control gear or via corridorFUNCTION Plug.
Note: To apply a voltage of 230 V for 5 minutes at the switchDIM input of the control gear the sensor must detect motion for more than 5 minutes or a switch-off delay longer than 5 minutes must be set.

4.3 Start up behaviour

20 seconds after mains is connected, the sensor is ready and indicates this by switching on the green LED.

4.4 Motion detection

Ceiling mounted:

Sensibility					
h	100 %	75 %	50 %	30 %	10 %
			d		
2.5 m	7.5 m	4.5 m	3.5 m	2.0 m	1.50 m
3.0 m	8.0 m	5.5 m	4.0 m	1.5 m	0.50 m
3.5 m	6.0 m	3.5 m	2.0 m	0.5 m	0.25 m
4.0 m	6.0 m	3.0 m	1.5 m	0.5 m	0.25 m
4.5 m	4.0 m	2.0 m	1.0 m	0.5 m	0.25 m
5.0 m	3.5 m	1.5 m	1.0 m	0.5 m	0.25 m

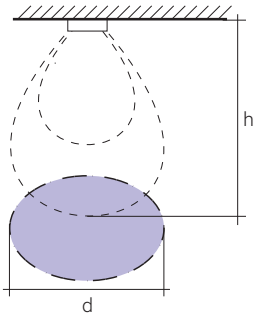

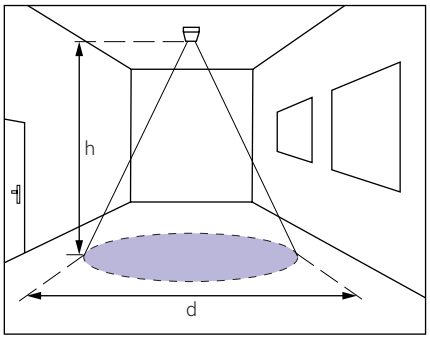

Wall mounted – passing by:

x	y	h	Sensibility
8.0 m	5 m	1.8 m	100 %
5.0 m	5 m	1.8 m	75 %
3.0 m	5 m	1.8 m	50 %
1.0 m	4 m	1.8 m	30 %
0.5 m	3 m	1.8 m	10 %

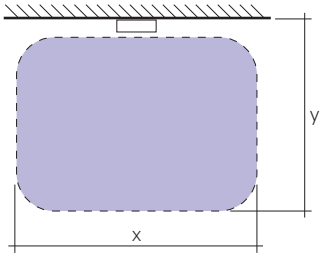

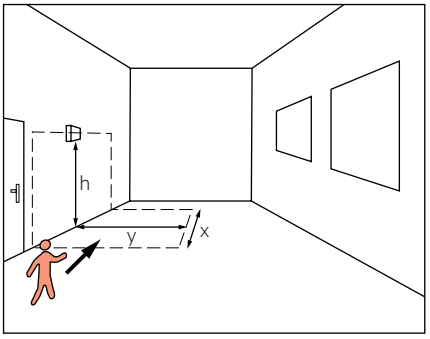

Wall mounted – moving towards:

x	y	h	Sensibility
7 m	8 m	1.8 m	100 %
7 m	7 m	1.8 m	75 %
5 m	4 m	1.8 m	50 %
3 m	2 m	1.8 m	30 %
2 m	2 m	1.8 m	10 %

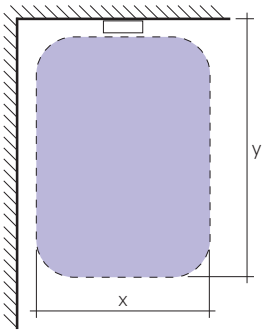

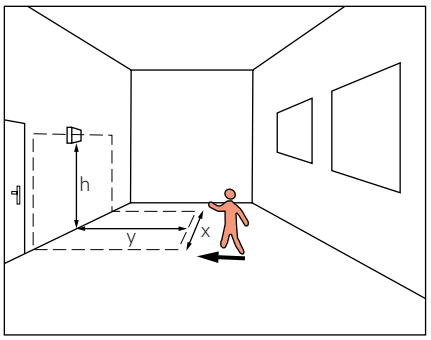

Diameter of the detection cone as a function of height at maximum detection area without taking objects in the room into consideration. Stationary objects (walls, tables, floor-standing luminaires, etc.) located in the direct view of the sensor change the characteristics of the detection area.
The mentioned values are typical values depending on the environment and application the detection area may change.

4.5 Detection sensitivity

Optimized for detection of pedestrians with a speed of 0.5 – 1.5 m/s corresponds to 1.8 – 5.4 km/h.
Depending on the application and environmental conditions the maximum detectable speed of object may vary.

5. Miscellaneous

5.1 Disposal of equipment

Return old devices in accordance with the WEEE directive to suitable recycling facilities.

5.2 Additional information

Additional technical information at www.tridonic.com → Technical Data

Guarantee conditions at www.tridonic.com → Services

Lifetime declarations are informative and represent no warranty claim.
No warranty if device was opened.